CVM
The Preferred Valves

Double Flange Eccentric Butterfly Valve

Standard Specification

Product Standard:	BS EN 593, BS 5155, ISO 10631
Face to Face Dimensions:	ISO 5752, EN 558-1 Basic Series 13
Flange Connections:	BS EN 1092-2, ISO 7005-2, DIN 2501
Test Procedures:	BS EN 12266-1, API 598

Product Range

Size:	DN 200 to DN 3000
Pressure Rating:	PN10, 16, 25
Temperature Range:	-20°C to +120°C

Features

Double eccentric.
Bi-directional.
Food grade epoxy coating.
Rubber Seal on eccentric disc can be easily replaced.

Application

Raw water, treated water, sea water, waste water, industrial processing

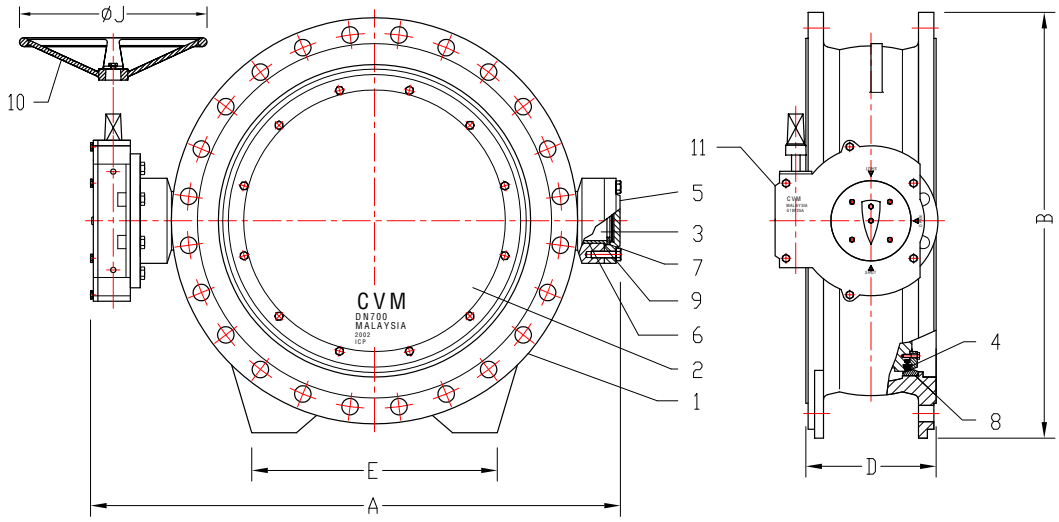

Dimensions

DN	A	B	D	E	J	Flange	Weight (kg)
200	475	365	152	-	300		25
250	565	430	165	-	300		40
300	655	485	178	270	300	Refer to	71
350	740	545	190	300	300	BS EN 1092-2,	115
400	760	605	216	350	400	ISO 7005-2	150
450	965	665	222	400	400		184
500	975	740	229	415	400		235
600	1085	865	267	485	400		318
700	1265	935	292	550	400		450
800	1460	1050	318	640	400		635
900	1600	1150	330	700	400		855
1000	1700	1280	410	770	400		1140
1200	2100	1510	470	800	400		1950
1400	2450	1710	530	1050	400		2760
1500	2650	1845	530	1100	400		2960
1600	2750	1655	600	1180	400		3420
1800	3200	2155	670	1400	400		4880
2000	3500	2365	760	1600	400		6830

Material Specification

No.	Part Name	Material	Material Standard
1	Body	Ductile Iron	DIN 1693, GGG 50 BS EN 1563, EN-JS-1050
2	Disc	Ductile Iron	DIN 1693, GGG 50 BS EN 1563, EN-JS-1050
3	Shaft	Stainless Steel X20Cr13	DIN: 1.4021 AISI 420
4	Rubber Seal	EPDM	
5	Bottom Cover	Ductile Iron	EN-GJS-500-7, DIN GGG 50
6	Shaft Bushes	Metallic Base PTFE Self Lubricating Bearing	
7	LS Thrust Bearing	Bronze	
8	Body Seat	Stainless Steel	DIN: 1.4301 AISI 304
10	Shaft Seal	EPDM	
11	Handwheel	Ductile Iron	DIN 1693, GGG 50 BS EN 1563, EN-JS-1050
12	Gear Box		

www.cvmsb.com
info@cvmsb.com